Maxton Elevator Shut Off Valves are specifically built for hydraulic elevators and are labeled and tested to comply with ASME A17.1 / CSA B44 at a 5:1 Safety factor.

BV2G2G
SHOWN

- Hard chrome plated carbon steel ball
- Blow out proof stem used across the line
- Unique locking handle design preventing accidental fluid loss
- 2 year Maxton valve warranty
- Interchangeable flange sizing of 2” & 2.5” grooved or threaded connections (contact Maxton for combinations not listed below)

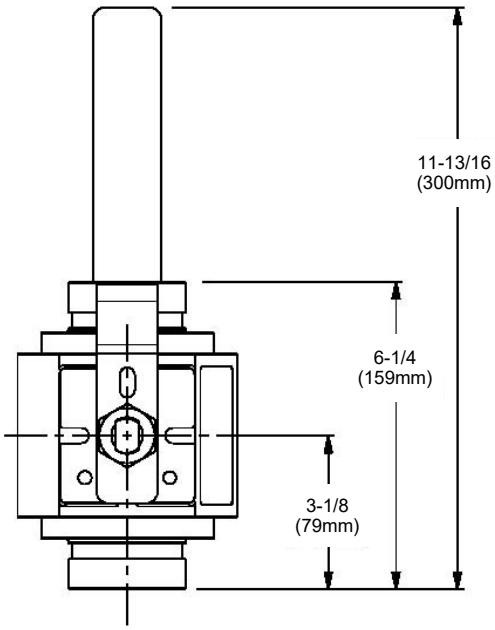

TOP VIEW

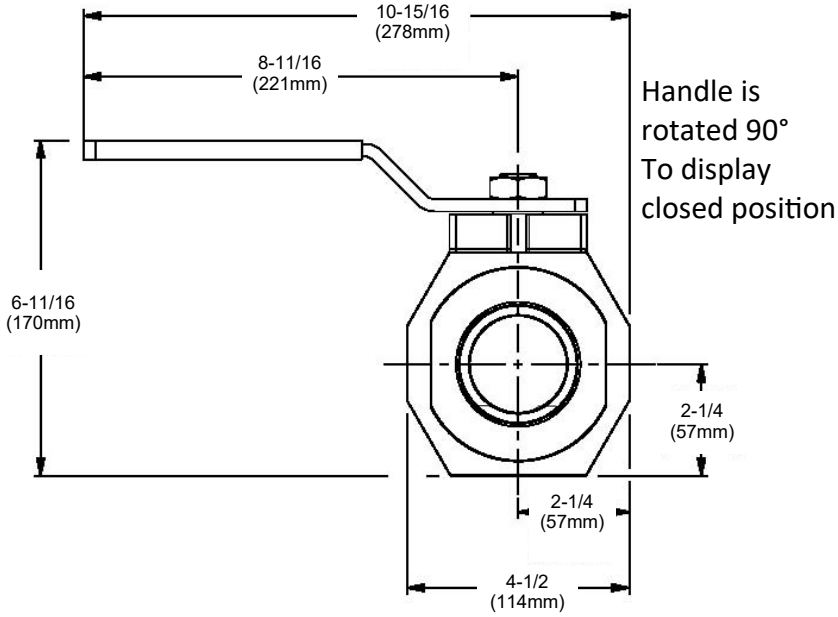

FRONT VIEW

SPECIFICATIONS

Oil Type	Hydraulic Fluid
Max. Operating Temperature	150° F (65° C)
Max. Operating Pressure	1000 psi (69 bar)
Line Connections	2”, 2.5”, Grooved or NPT 3” Grooved
Valve Type	1/4 Turn, Ball

VALVE MODEL	WEIGHT
BV2G2G **2" Full Port Grooved**	11.30lbs. (5.13 kg)
BV2T2T **2" Full Port NPT**	13.05 lbs. (5.92 kg)
BV25G25G **2.5" Grooved**	11.65 lbs. (5.28 kg)
BV25T25T **2.5" NPT**	11.65 lbs. (5.28 kg)
BV3G3G **3" Grooved**	13.30 lbs. (6.03 kg)

The Maxton Hydraulic Shut Off Ball Valve has been tested specifically for hydraulic elevator applications and comply with ASME A17.1 / CSA B44.

BV1-4A	BV1-8A	BV3-4
		
1/4” NPT Female to Male	1/8” NPT Male to Male	3/4” NPT Female to Female

Specifications

Max Operating Pressure	1000 psi (55 bar)
Line Connections	1/8” NPT, 1/4" NPT or 3/4” NPT
Max Operating Temperature	150° F (65° C)
Oil Type	Hydraulic Fluid

Overall Dimensions:	**Width (inch)**	**Length (inch)**	**Height (inch)**	**Weight (ounce)**
BV1-4A	**.950**	**2.050**	**1.275**	**4 oz.**
BV1-8A	**.950**	**1.900**	**1.275**	**3 oz.**
BV3-4	**1.875**	**6.250**	**2.900**	**24 oz. (1.5 lbs)**

Piping Dimension:	**Length (inch)**
BV3-4	**2.900**

Maxton Bleed Port's are machined parts with black oxide finish designed to aid in the bleeding of air from the jack during installation, oil replacement, or other repairs where unwanted air might enter the jack. No more oil showers or worn out threads in the jack when typical pipe drain plugs were used. Simply back out the center set screw slightly releasing air while leaving the main body attached to the jack.

297150	297170
	
1/4” Bleed Port	1/8” Bleed Port

Specifications

Material	5/8" Hex, Ledloy
Max Operating Pressure	1000 psi (55 bar)
Line Connections	1/4” NPT or 1/8" NPT
Max Operating Temperature	150° F (65° C)
Oil Type	Hydraulic Fluid

Overall Dimensions:	**Width (inch)**	**Height (inch)**	**Weight (ounce)**
297150	**.625**	**.900**	**1.0 oz.**
297170	**.625**	**.900**	**0.8 oz.**

Introduction

The Maxton Interlock Hydraulic Valve (ILV) is a solenoid operated, normally closed check valve designed to prevent unintended elevator down movement. The ILV only allows the oil to flow in the down direction when the solenoid coil is energized. Due to its unique design the up flow is unrestricted and does not require power to the solenoid coil. The ILV should be installed adjacent to the main control valve, no adjustments are required. A push button Manual Lowering is provided to lower the hydraulic elevator in case of emergency.
The Maxton ILV complies with ASME A17.1 / CSA B44

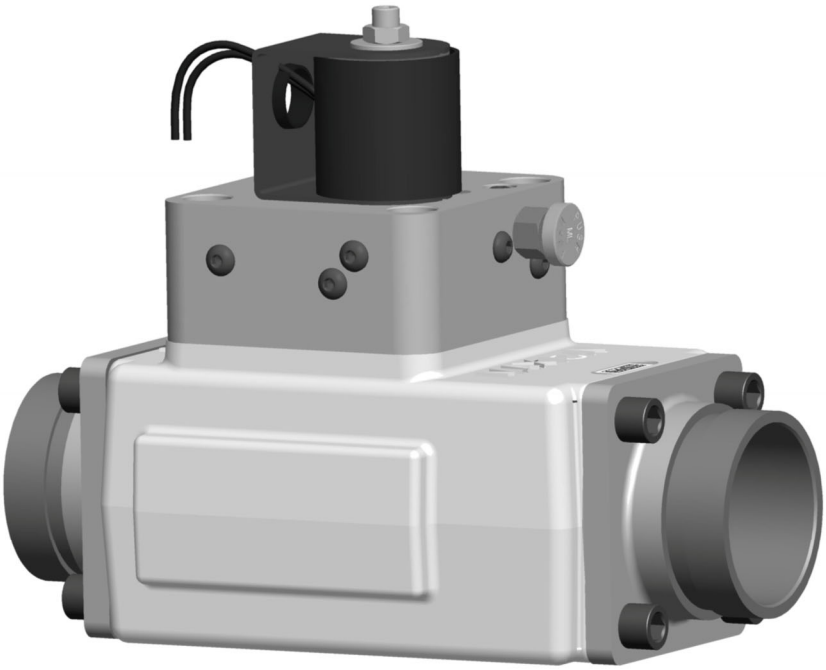

Specifications

RATED FLOW	Maximum 360 gpm (1362 l/min)
Operating Pressure	
Minimum	100 psi (6.9 bar)
Maximum	800 psi (55 bar)
Line Connections	
Jack Port (Flange)	2, 2½" NPT or Grooved
Tank Port (Flange)	2, 2½" NPT or Grooved
Operating Temperature	80°-150° F (26° - 65° C)
Oil Type	Hyd. ISO VG 32 150 SUS @ 100° F (38° C)

Overall Dimensions

Width	11 1/4 inches (286mm)	Height	8 13/16 inches (224mm)
Depth	5 1/4 inches (133mm)	Weight	28 lbs. (12.7kg)

Standard Features

- Unit body construction.
- Steel sleeve inserts in valve body
- Grooved or threaded line connections
- 115 VDC solenoid coil
- Factory tested prior to shipping
- 2 year limited warranty

Optional Features

- 3" Grooved flanges
- 120 VAC / 12 VDC solenoid coil
- 240 VAC solenoid coil
- 120 VAC / 24 VDC solenoid coil

ILV COIL OPERATING SEQUENCE

ILV

Energize when a down call is registered along with down solenoid Coils (D & DL) to allow down flow. De-Energize to stop.

MANUAL LOWERING

Open main valve manual lowering first. On Interlock Valve, push ML Button to lower car downward at leveling speed when necessary.

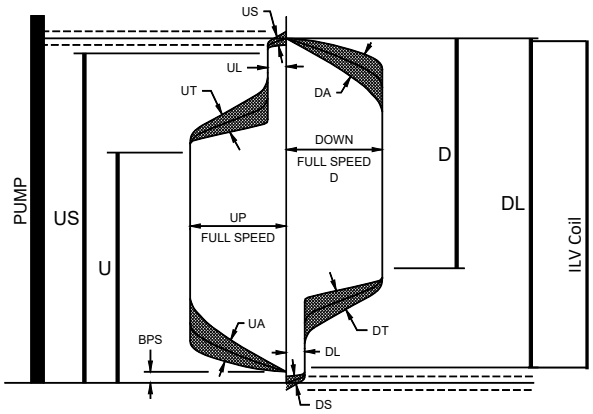

ILV TYPICAL INSTALLATION

NOTE: Solenoid/Coil Assembly must be mounted in the vertical position

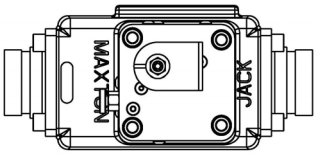

ILV Top

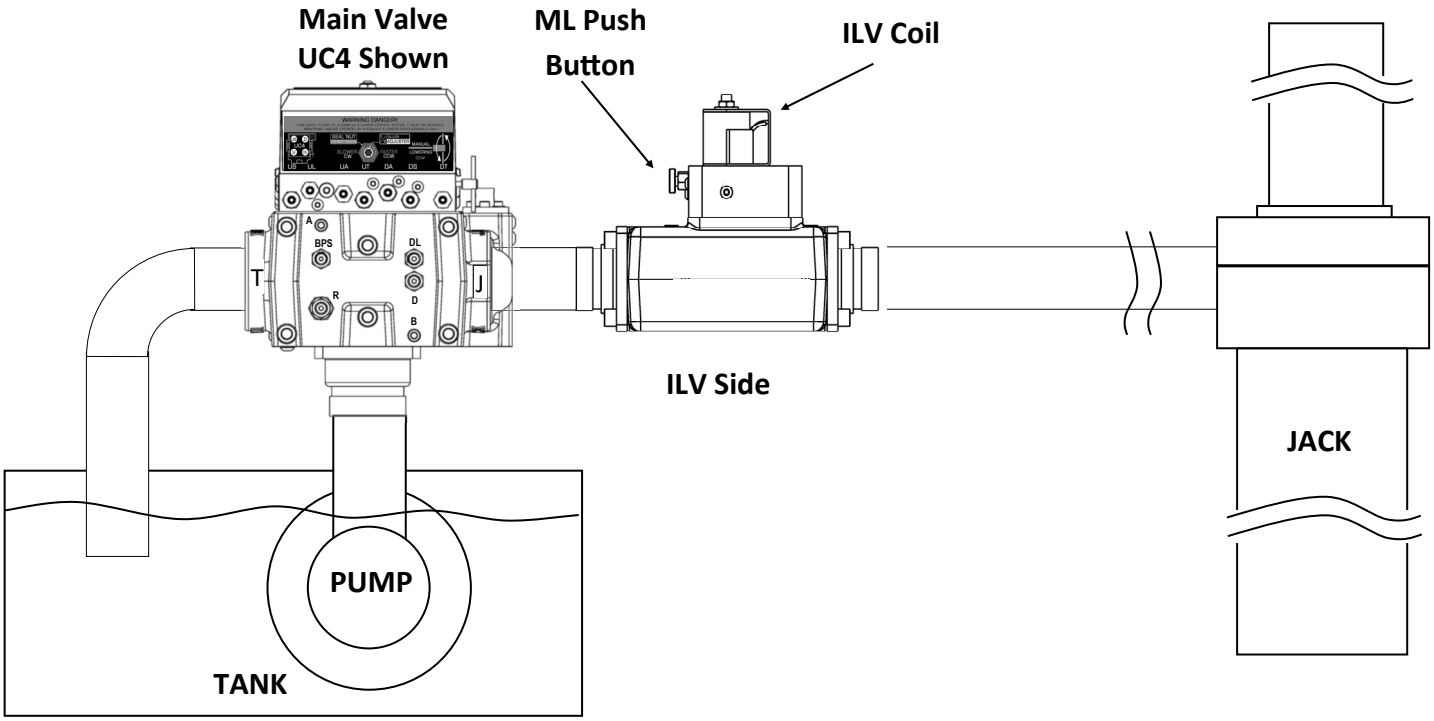

SafeTach2™

The next generation SafeTach2 Elevator Performance Meter (APP/Node combo) from Maxton is the most fiscally responsible tool available for the elevator industry to date. With the cost of labor reaching historic levels maximizing ROI, use of time, and volume of work completed is what really matters to your bottom line. **

"It's the only tool out there that gives me graphs and speeds for quick accurate adjusting of hydraulic and traction elevators. It's like having another guy," said David Hall, Elevator Mechanic, Koch Elevator.

SafeTach2 now incorporates an APP with the user's mobile device to provide remote access of accurate hydraulic & traction elevator performance measurements.

Resolution:

- Speed +/- 1 fpm
- Acceleration +/- 1 milli-g
- Jerk +/- 1 ft/sec³

New benefits:

- Bluetooth remote connectivity w/ App on user's mobile device
- Report generation for up to 8 runs (name/time/date) print, email, or send to cloud
- 3 axes (X, Y, Z)
- Graphing (Velocity, Acceleration, Jerk, Sound)
- 24 continuous hours of operation per charge
- Unlimited run data collection
- The SafeTach2 is factory calibrated for the life of the unit. Barring physical damage to the unit, the state-of-the-art electronic circuitry ensures the SAFETACH2 never needs re-calibration.

Download APP for a FREE look!!

ANDROID APP ON Google play

Download on the App Store

**Scan for Case Study ROI example here.

This page intentionally left blank

TA4M

RENTAL PROGRAM
FIELD TRAINING AID

The TA4M is a complete portable Hydraulic Elevator Simulator with automatic controls. It is used for adjustment training for Maxton UC4 and UC4M control valves. With this simulator, installation and service technicians can be easily trained in a class room environment to setup these Maxton control valves utilizing the same control features as a commercial elevator.

Elevator car motion is simulated by the movement of a piston traveling up to 36 inches at 35 feet per minute. The slowdown signals and stopping points have been set based on cylinder travel and speed.

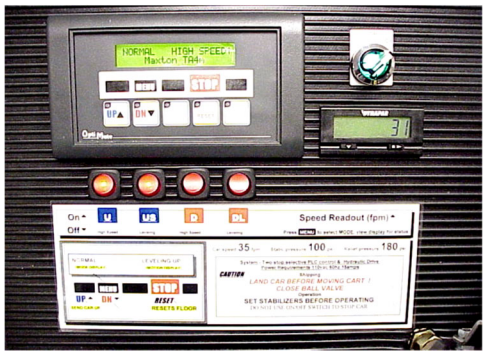

Portable Elevator Simulator

Features:

- Maxton UC4M control valve
- Pressure gauges (A port, B port)
- PLC control operator Interface.
  - Speed Readout
  - Easily toggle ON/OFF coils
  - Digital position feedback
- Direct drive power unit with overload
- Instruction manual
- Clean and quiet, suitable for classroom use

An instruction manual and built in visual aids for operation of the TA4M, allows comprehensive hands-on experience in operation of MAXTON UC4 and UC4M control valves.

TA4M System -two stop selective PLC control & hydraulic drive

Power Requirements: 115vac 60hz 15amps

System Weight:	*520*	*lbs*
Crate	*350*	*lbs*
Total	*870*	*lbs each*
Shipping	*FOB*	*Minden, NV*

Pressure Switch Normally Open (PSNO-2)
Complies with ASME A17.1 / CSA B44

The Maxton Pressure Switch (PSNO-2) has been tested specifically for hydraulic elevator applications. The switch has been pre-set for a fast and accurate response in a low-pressure activation and can be mounted directly to all Maxton control valves.

ASME A17.1-2010 Rule 3.26.8 - When cylinders are installed with the top of the cylinder above the top of the storage tank, a pressure switch shall be provided in the line between the cylinder and the valve, which shall be activated by the loss of positive pressure at the top of the cylinder. The switch shall prevent automatic door opening and the operation of the lowering valve or valves. The door(s) shall be permitted to open by operation of the in-car door button, when the car is within the unlocking zone.

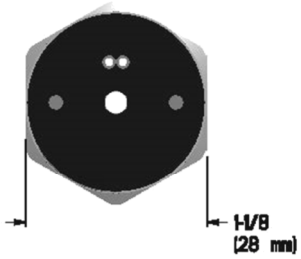

Specifications

Actuation pressure / rise	65 ±10 psi (contacts closed)
Release pressure / fall	45 ±5 psi (contacts open)
Nominal system pressure	800 psi
Max. working pressure	1000 psi
Burst pressure	5000 psi
Oil Type	Hydraulic Fluid
Line connection	1/8” NPT (Male)
Overall dimensions	(see drawing)
Oil Temperature range	80° F to 150° F
Electrical rating	10A 125 VAC, 6A 250 VAC (RESISTIVE)
cURus	E327045
Life at 800 psi	2,000,000 cycles
Switch configuration	SPST, at atmospheric pressure: open

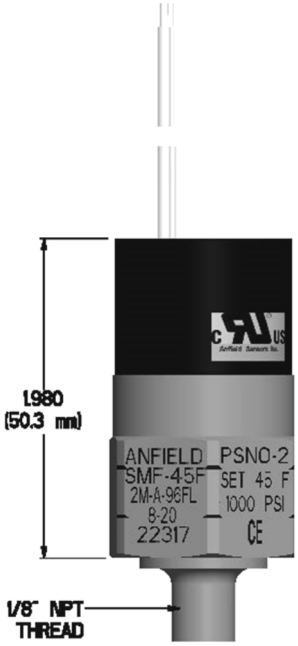

Lead Length:96” +/- 2” (2438mm)
Wire Spec. 18# AWG-STYLE 3173
125° C 600V XLPE
CSA-CL1251
Wire color: Gray

Load Weigh Switches (HPAS-1, HPAS-2)
Comply with ASME A17.1 / CSA B44

The Maxton's Load Weigh Switches (HPAS-1, HPAS-2) have been tested specifically for hydraulic elevator applications. The High Pressure adjustable switch can be mounted directly to all Maxton control valves.

Code Compliance: Under the latest Section 2.16.10 revision NYC DOB requirements all passenger and freight elevators must have a load detection sensor. This device detects if the load exceeds the capacity of the elevator. If an overload is detected, the elevator doors shall reopen and remain open, and a voice notification and visual signal must indicate that the car is overloaded.

Maxton Load Weigh Switches get the job done for NYC DOB and all others that adopt similar hydraulic elevator load detection safety codes.

Features:

· Smaller footprint for easier fit within power unit

· Normally open or closed lead options

· Single tamper resistant 5/64" Hex wrench adjuster

· Larger pressure range with 2 switches

· 1 Year Warranty

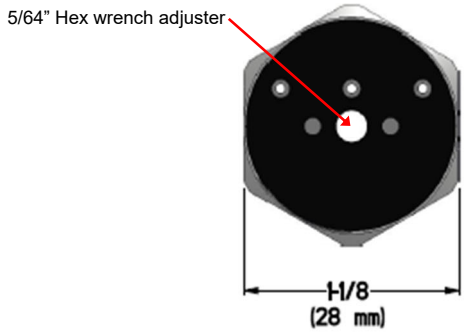

Specifications

Oil Type	Hydraulic Fluid
Line connection	1/8" NPT (Male)
Overall dimensions	(see drawing)
Oil Temperature range	80° F to 150° F
Burst pressure	5000 psi
Electrical rating	5A 12/24 VDC, 5A 125VAC, 3A 250VAC
cURus	E327045
Life at 1000 psi	1,000,000 cycles
Switch configuration	SPDT (NO and NC)

HPAS-1

Actuation Pressure / Rise	150-600 PSI
Release Pressure / Fall	95% of Actuation Pressure +/-2%
Nom. System Pressure	150-600 PSI
Max Working Pressure	600 PSI

HPAS-2

Actuation Pressure / Rise	500-1200 PSI
Release Pressure / Fall	90% of Actuation Pressure +/-2%
Nom. System Pressure	500-1200 PSI
Max Working Pressure	1200 PSI

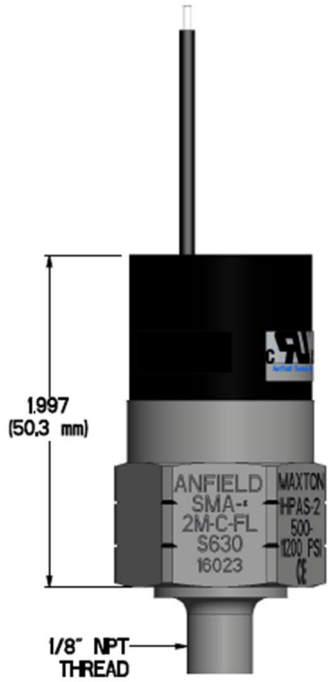

Lead Length:18" +/- 2" (457mm)
Wire Spec. 18# AWG-STYLE 1015/1230/1032 105°C 600v PVC CSA-TEW
Wire color: Black, Red, Blue

The Maxton Isolation Couplings designed for electric isolation (preventing electrolysis) in hydraulic elevators. The ISO2 is comprised of two grooved pipe flanges coupled by a threaded retainer ring. This design has increased strength, reduced weight, and all at a lower cost. The threaded ring design provides superior strength through the consistent sealing torque around the Thermoplastic Seal. Our insulators are created with the highest quality hybrid thermoplastic to provide superior performance, noise and vibration reduction . Complies with ASME A17.1/CSA B44.

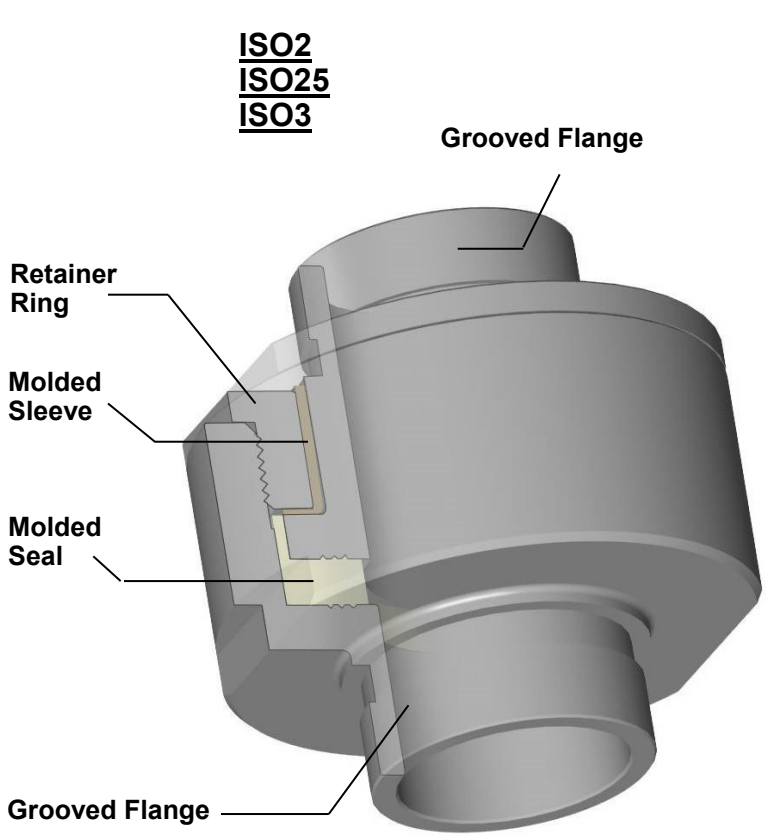

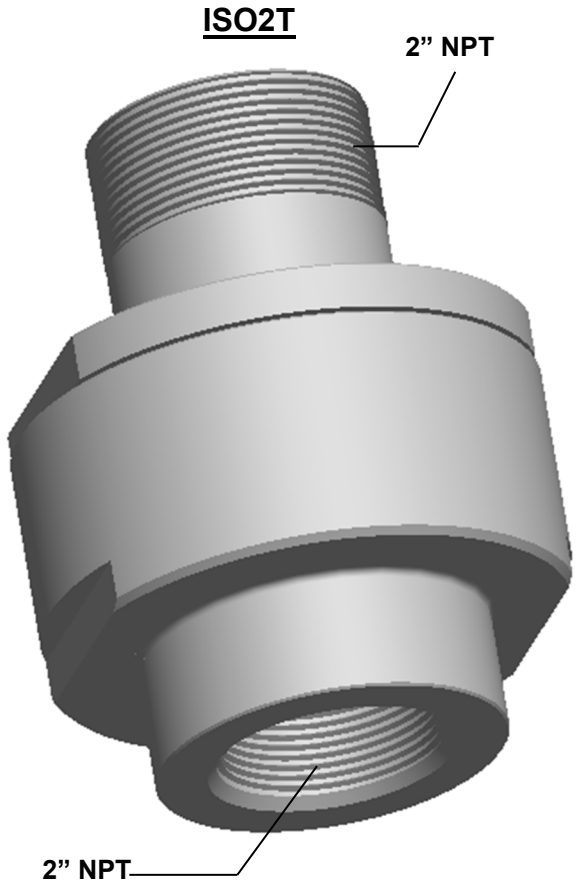

Specifications

Oil Type	Hydraulic Fluid
Maximum Operating Temperature	150° F (65° C)
Maximum Operating Pressure	1000 psi (69 bar)
Line Connections	2”, 2.5”, 3” Grooved or 2” NPT

	IS02 2" Grooved	IS02T 2" NPT	IS025 2.5" Grooved	IS03 3" Grooved
Maximum Flow Range	200 gpm (757 l/min)	200 gpm (757 l/min)	300 gpm (1135 l/min)	400 gpm (1514 l/min)
Overall Dimensions				
Width:	4 ½ in. dia. (115 mm)	4 ½ in. dia. (115 mm)	5 ¼ in. dia. (133 mm)	5 ¼ in. dia. (133 mm)
Length:	4 ½ in. (115 mm)	5 ½ in. (140 mm)	4 ½ in. (115 mm)	4 ½ in. (115 mm)
Weight:	8.15 lbs. (3.65 kg)	8.85 lbs. (4.01 kg)	10.85 lbs. (4.92 kg)	10.05 lbs (4.55 kg)

The Tank Discharge Filter (TDF) is a simple yet effective hydraulic elevator oil filter system that removes contaminants down to 5 microns. The TDF system mounts vertically on the valve/tank discharge line as shown below (image bottom right). The filter bag is designed for easy replacement when dirty to maintain a clean, well performing, hydraulic system (see TDF usage below).

The TDF system can be applied to all Maxton commercial elevator control valves (UC1/1A/2/2A and UC4/4M/MR) as well as other commercial valves on the market using a 2 inch connection. When an elevator system flow goes beyond 250 gpm multiple filters can be put together, accommodating more flow, using a manifold arrangement. In this case make sure installation allows room for proper filter bag operation (expansion of filter bag) with complete clearance.

TDF usage and maintenance recommendations:

Clean System Definition – This can be described as a completely new hydraulic elevator installation with new oil. Maxton recommends checking the TDF quarterly to maintain optimal elevator performance. Filters need replacing when white bag color turns brown/black to maintain a clean system.

Non-Clean System Definition – This is an elevator system in use without an oil filtration device. Maxton recommends installing the TDF and running the pump (no coils energized) for several minutes to filter the oil in the system. **Note:** If the TDF captures a substantial amount of contaminants (white bag turns brown/black in color) during this process then Maxton recommends cleaning the tank, purging or replacing the oil and replacing the TDF bag. Perform quarterly filter checks to maintain clean oil for optimal elevator performance.

Specifications

Max. flow per filter (TDF1 / 1V)……125 gpm
Weight (TDF1 / 1V)…… 5.00 lbs
Max. flow per filter (TDF2 / 2V)……. 250 gpm
Weight (TDF2 / 2V)…… 5.95 lbs
Max. operating pressure……... 5 psi
Max. operating temperature……150° F
Line connection, tank…….. 2” NPT or Grooved
Oil type…….… Hydraulic Fluid
Fully expanded bag diameter……..… 10 in.
Height (TDF1 / 1V) …….. (A)15” Pipe, (B) 20” w/ bag
Height (TDF2 / 2V) ……(A) 22” Pipe, (B) 28” w/ bag
Filter bag rating…….. 5 Micron

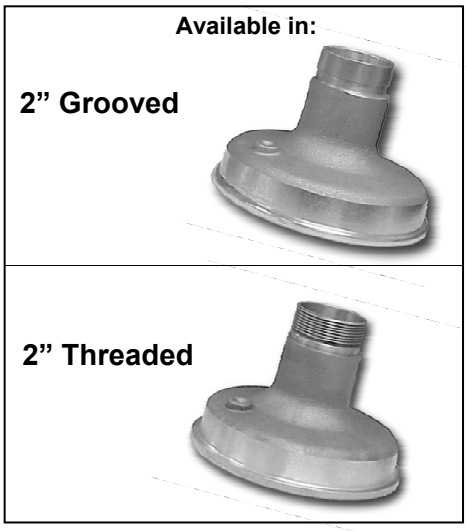

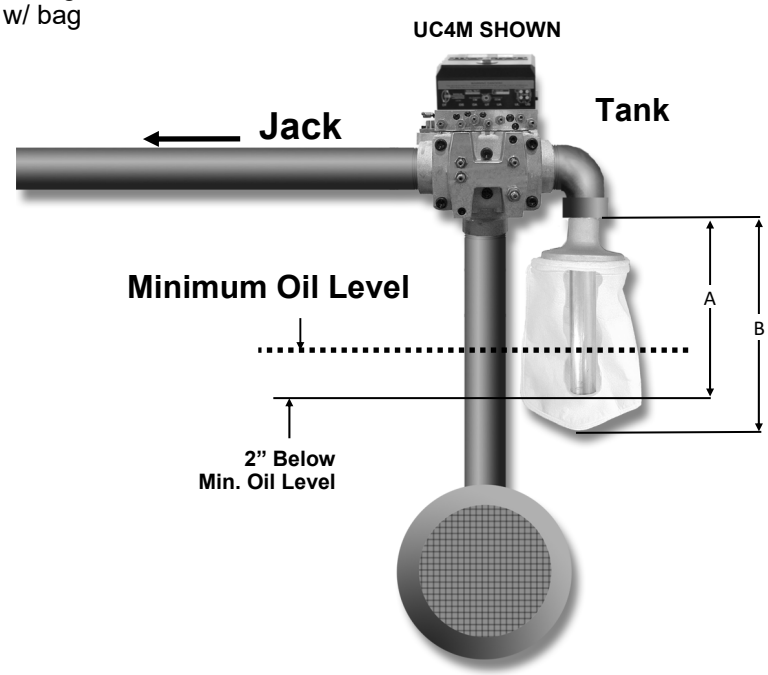

THREAD TO GROOVED ADAPTER 2", PORT ADAPTER 2" TO 3/4"

Maxton Thread to Grooved Adapters are another quality Maxton product that allows the UC4, UC4M, and UC4MR valve models to be easily adapted for installation by providing the choice between threaded or Grooved connections on the jack and tank ports. The seal ring design eliminates the need for sealant while providing a liquid and air tight seal.

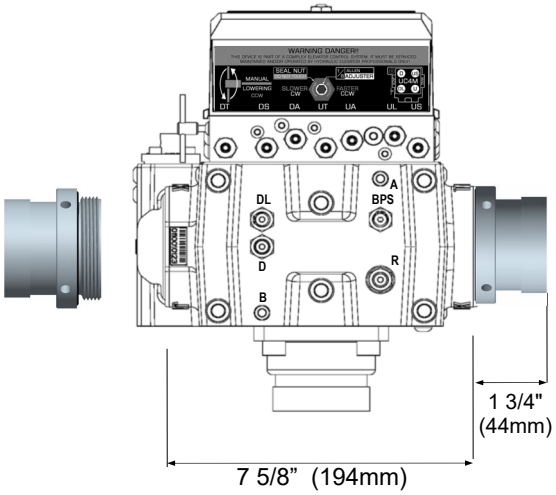

Specifications

Standard Rated Contract Flow	185 gpm (700 l /min)
Max Operating Pressure	800 psi (55 bar)
Line Connections	2" Grooved
Max Operating Temperature	150° F (65° C)
Oil Type	Hydraulic Fluid
Overall Dimensions	Dia: 3 inches, Height: 2 ¼ inches, Weight: 1.1 lbs.

(UC4M SHOWN)

Maxton 2" to 3/4" Port Adapter Flange was designed for Residential/LULA or low flow hydraulic elevator applications using the UC4, UC4M Series of Maxton Valves. These easy to install flanges use a seal ring design to insure proper sealing of the 2" side against the Maxton valve while the 3/4" NPT side allows for the easy conversion of the valve to fit most Residential/LULA applications.

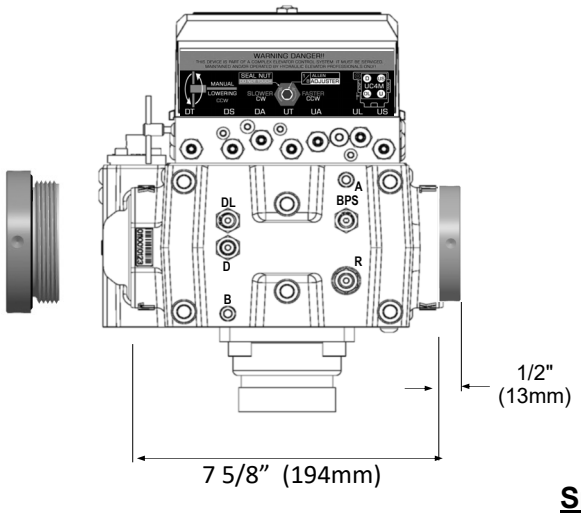

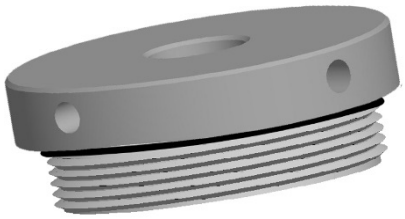

Specifications

Standard Rated Contract Flow	24 gpm (90.8 l /min)
Max Operating Pressure	800 psi (55 bar)
Line Connections	3/4" NPT
Max Operating Temperature	150° F (65° C)
Oil Type	Hydraulic Fluid
Overall Dimensions	Dia: 3 inches, Height: 1 inches, Weight: 1.25 lbs.

The Hydraulic Quick Disconnect installed into the “A” port of your Maxton valve provides for fast and easy gauge installation when measuring working pressure and setting the relief valve. Included In kit QDK1-8 is the 1/8” NPT nipple, 1/8” NPT Hex Nipple and a 1/8” NPT 90° fitting to accommodate possible space constraints.

Quick Disconnect Couplings and Nipples are Interchangeable with ISO B 7241 Fittings and can also be installed in the "B" Port for compliance with code ASME A17.1-2010 3.19.4.5.

QDC1-8	QDK1-8		
			
1/8" NPT Coupling	**1/8" NPT Nipple**	**1/8" NPT Hex Nipple**	**1/8" NPT 90° Fitting**

Specifications

Series "H" Hydraulics	Steel
Max Operating Pressure	800 psi (55 bar)
Line Connections	1/8" NPT - A, B ports
Max Operating Temperature	150° F (65° C)
Oil Type	Hydraulic Fluid

Overall Dimensions:	**Width** (inch)	**Height** (inch)	**Weight** (ounce)
Coupling	1	2	2
Nipple	1/2	1-1/4	0.5
Hex Nipple	1/2	1-1/16	0.05
90° Fitting	5/8	1-1/4	0.05

MAXGLIDE

HYDRAULIC OIL ADDITIVE

This product is not new to the field.
MAXGLIDE is a proven product in the reduction and elimination of serious jack piston packing friction (STICK SLIP) problems.

Performance Claims:

- ***Reduced oil operating temperature***
- ***Minimizes packing friction***
- ***Increases floor stop accuracy***
- ***Stabilizes operating performance***
- ***Reduces heat and operating wear on hydraulic system components***
- ***Can be used with Petroleum and vegetable based Hydraulic fluids***

Application:

To determine if **MAXGLIDE** will be effective: Apply 2 to 4 ounces onto piston surface just above packing gland. If STICK-SLIP is eliminated add 1% to 5% by volume to oil contents of reservoir.

(Minimum 1 gallon to a maximum 5 gallons MAXGLIDE to 100 gallons of oil)

MAXGLIDE is not a miracle cure, but it has provided remarkable ride improvement under difficult field conditions.

MAXGLIDE IS SAFE FOR SUBMERSIBLE MOTORS

WATER VALVE

Maxton MFG. Co produces all current valve series (UC1A,2A,4,4M,4MR) as Water Valves. These valves are designed for use in water glycol systems.

Please contact Maxton Technical Support for further information at support@maxtonvalve.com

UC4/4M/4MR WATER VALVE

UC1A, 2A WATER VALVE

EXPLOSION PROOF COIL COVER

Maxton MFG. Co produces Explosion Proof Coil Covers for "Use in Hazardous Classified Locations" on a special order case-by-case basis.
Class 1, Division 1, Groups A, B, C, D and Class 2, Division 1, Groups E, F, and G

Please contact Maxton Technical Support for further information at support@maxtonvalve.com

UC4/4M/4MR EXPLOSION PROOF COIL COVER

UC1A, 2A EXPLOSION PROOF COIL COVER